BULGARIAN ACADEMY OF SCIENCES
INSTITUTE OF ELECTRONICS
"Acad. Emil Djakov"

All-optical laser magnetometer: Miniaturization and parameter optimization

Leaded by: Assoc.Prof. Dr. Stefka Stefanova Cartaleva, Institute of Electronics, BAS

БИн-2/07 (2008 – 2011)

Partners: University of Calcutta, India, Coherent Spectroscopy group, Prof. Pradip Narayan Ghosh and Dr. Biswajit Roy.

Aim of the project: The main goal of the project is related to the development of a portable, all-optical sensor, diode-laser based magnetometer with sensitivity in the pico-Tesla range and having sub-millimeter range resolution in space. Systematical theoretical and experimental investigations are going on with three types of cells aiming their sub-millimeter-size miniaturization and parameter optimization of the obtained coherent resonances.

Figure 1 Illustration of the Cs cell with miniaturized thickness in the μm-range (between 0.5 and 3 times the wavelength of the resonant radiation λ=852 nm)

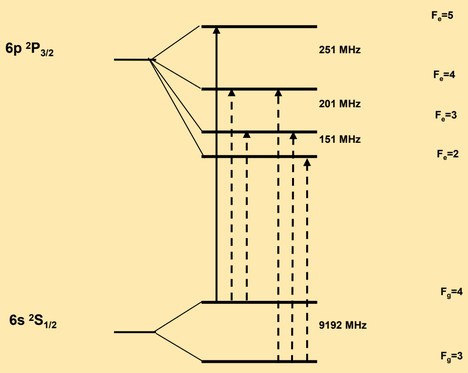

Figure 2 Energy-level diagram for D_2 line of ^{133}Cs. Open transitions (dashed line) are distinguished from the completely closed transition (solid line).

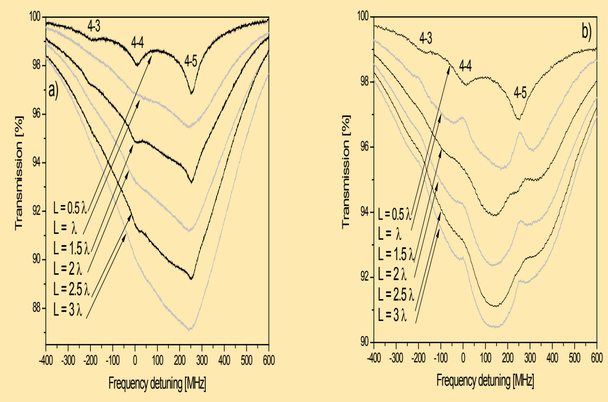

Figure 3: Transmission spectra of the F_g = 4 set of transitions, for low (a, 0.2 mW/cm²) and high (b, 20 mW/cm²) light intensities.

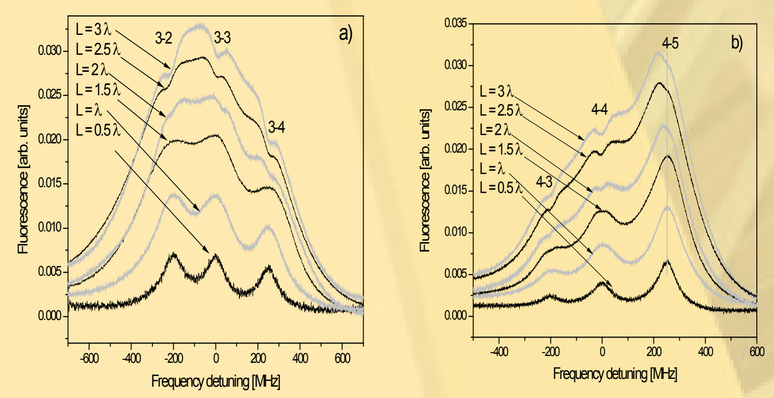

Figure 4: Fluorescence spectra for F_g = 3 (a) and F_g = 4 (b) sets of transitions, the light intensity is 50 mW/cm².

JOSA B Vol. 26, No. 11/November 2009/, *"Sub-Doppler spectroscopy of cesium vapor layers with nanometric and micrometric thickness", Stefka Cartaleva, Solomon Saltiel, Armen Sargsyan, David Sarkisyan, Dimitar Slavov, Petko Todorov, and Kapka Vaseva*

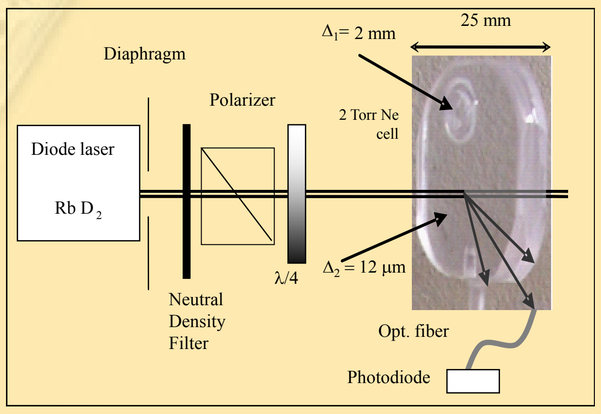

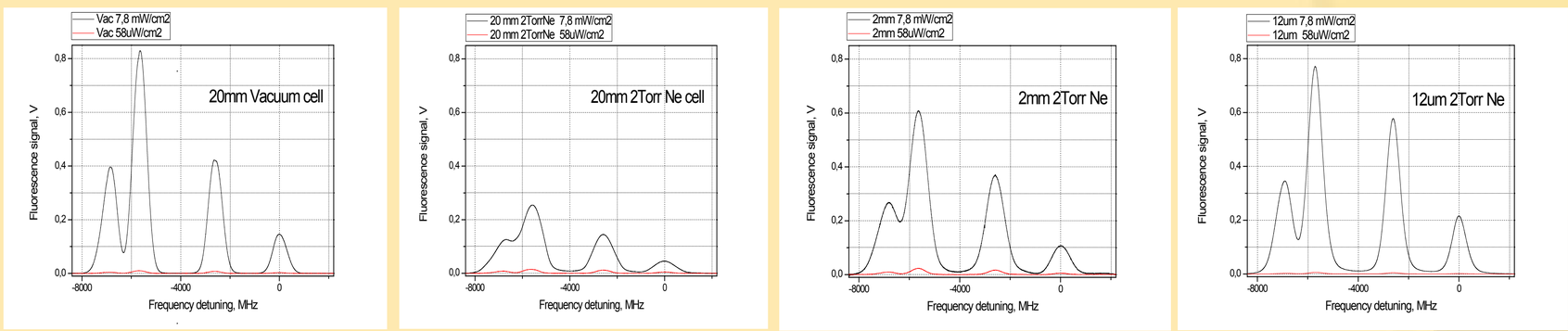

Illustration of the fluorescence signal from different kind of Rb cells. The effect of the different dimensions and kind of cells on the optical pumping efficiency is studied in comparison.

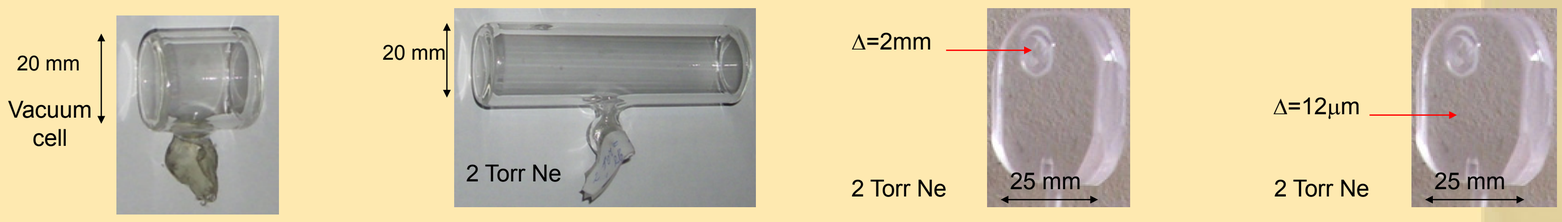

Indian Journal of Physics, vol. 84, issue 8, pp. 1083-1093 (2010), *"Rubidium vapor cell miniaturization-influence on the optical pumping process" Slavov, D. G.; Cartaleva, S. S.; Sarkisyan, D.; Ghosh, P. N.; Ray, B.; Mitra, S.*

Известия ВУЗов – физика, No 12/3 (2009), *"Миниатюризация ячеек на парах рубидия и ее влияние на процесс оптической накачки", Д. Г. Славов, С. С. Карталева, Д. Саркисян, П. Т. Зъбов, П. Н. Гош*

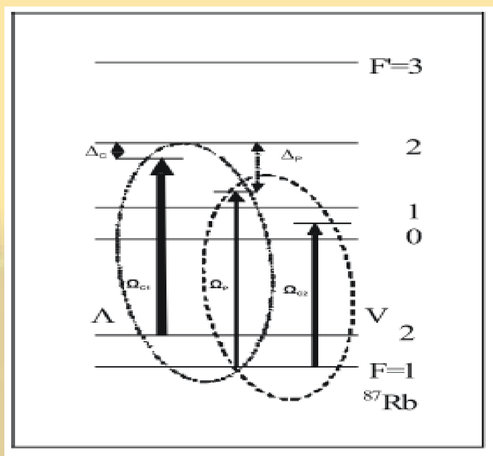

Figure 6. Energy level diagram of a (Λ+V)-type system in the D_2 transition of ^{87}Rb atoms interacting with three laser fields. The pump (Ω_{C1}) and probe (Ω_P) are forming a five level Λ-type system (dotted circle). The control (Ω_{C1}) and same probe (Ω_P) are forming the four level V-type system (dashed circle). Δ_C and Δ_P are the pump and probe laser detuning respectively.

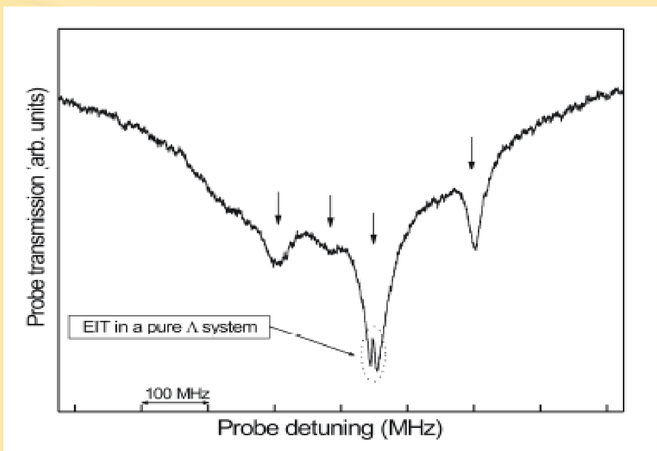

Figure 7. Experimental probe transmission signal versus the probe curve for the pure Λ-type system of ^{87}Rb-D_2 transition. For VSOP dips are marked by vertical arrows and the EIT signal is marked by dotted circles. The pump- and probe-intensity values are 72 mW/cm² and 13 mW/cm², respectively.

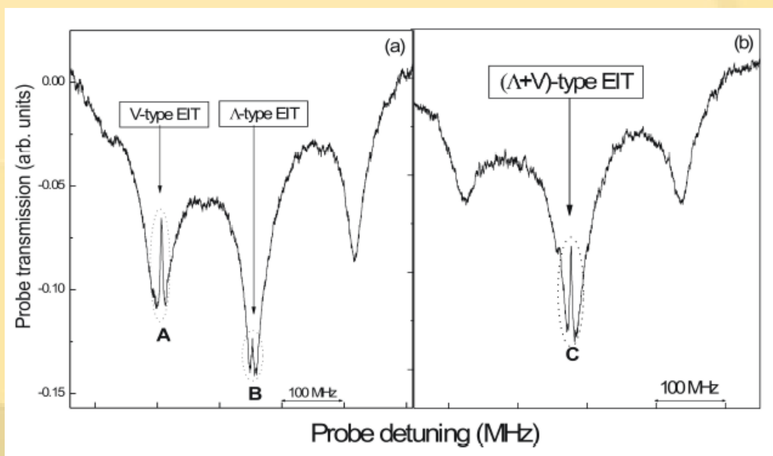

Figure 8. Experimentally observed probe transmission versus probe detuning curve for the (Λ+V) type system of ^{87}Rb-D_2 transition. (a) Simultaneous V-type EIT (marked by "A") and Λ-type EIT (marked by "B"), signals. (b) enhanced EIT signal (marked by "C") due to overlapping of two EIT signals A and B. The intensities of pump, control and probe lasers are 72 mW/cm², 30 mW/cm² and 13 mW/cm², respectively.

Proceedings SPIE Vol. 7747 77470B-7 (2011), *"Coherent laser spectroscopy of rubidium atoms",* Invited paper,
S. Mitra, M.M. Hossain, B. Ray, P.N.Ghosh, S. Cartaleva, D.Slavov

Optics Communications, 283, 1500-09 (2010), *"On Line Shape of Electromagnetically Induced Transparency in a Multilevel System",*
S. Mitra, M.M. Hossain, B. Ray, P. N. Ghosh, S. Cartaleva and D. Slavov